WORK GRIPPER

▶P.75~P.84

Work Gripper

COBOTEC ENGINEERING 20 de ani de experienta

0213221238

office@cobotec.ro

www.cobotec.ro

CATTED Business Park Chitila - Hala 11 Soseaua Centura Bucuresti, Km 62 Chitila Jud Ilfov Cod Postal 077045

WORK GRIPPER

Work Gripper AS series

Pneumatically operated stationary chuck
Can be used as an alternative to a fixture

- ●Small and lightweight design, with inbuilt air cylinder
- ●Easy mounting by air piping
- ●Hollow structure optimal for bar workiece and air blow
- ●Standard Soft Jaw for Power Chuck is used
- ●Lock valve unit ensures constant and regular gripping force in all machining conditions

＊CE correspondence

■ Dimensional Drawings

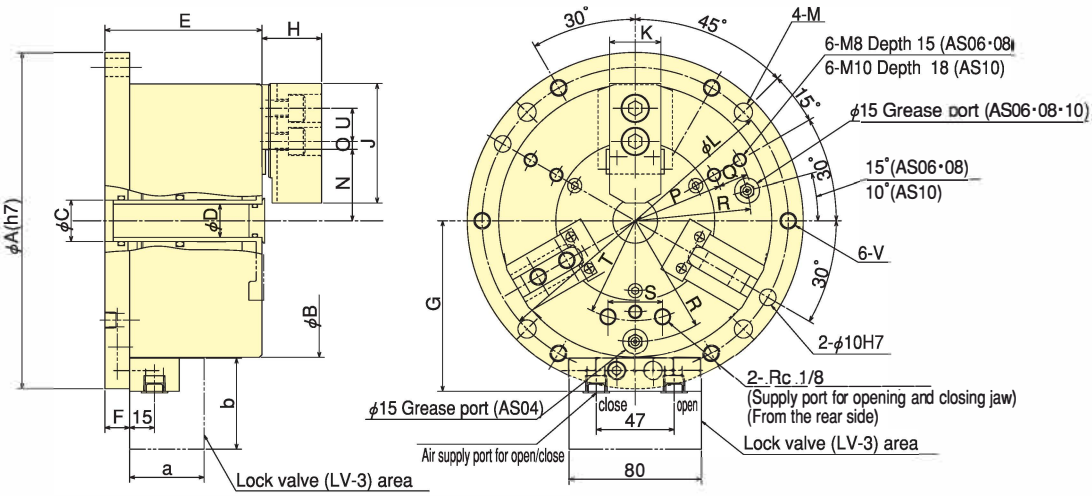

■ Dimensions ※The dimensions of a/b marked are the size of LV-3(Lock-valve).

Model \ Dimensions	φA (h7)	φB	φC (H7)	φD	E	F	G	H	J	K	φL (±0.2)	φM	N max.	N min.	O max.	O min.	P	Q	R
AS04	148	110	20H7	–	90	15	75.5	27	55	23	130	9	25.5	22.9	9.75	6.75	–	–	43
AS06	203	165	25H7	20	95	15	103	36	72	31	185	11	44.5	41.9	9.25	4.75	55	18	70
AS08	248	210	36H7	30	106	15	125.5	42	95	35	230	11	53	49.85	14.75	8.75	68	25	90
AS10	300	254	50H7	43	110	16	147.5	46	110	40	280	13	66	62.85	16	8.5	85	30	110

Model \ Dimensions	S	T	U	V	a	b
AS04	33	34	14	M8	45	55
AS06	33	60.3	20	M10	45	55
AS08	33	80	25	M10	45	55
AS10	33	95	30	M12	45	55

■ Specifications ※Air Consumption = Under Pressure 0.6MPa Plunger Stroke per 10mm

Model \ Specifications	Jaw Stroke (diameter) mm	Gripping Force [Pneumatic at 0.6MPa (0.6kgf/cm²)] kN (kgf)	Net Weight (kg)	Max. air pressure MPa(kgf/cm²)	Matching Soft top jaw	Gripping range(mm) Max.	Gripping range(mm) Min.	Air consumption (Nℓ)
AS04	5.2	7.5 (765)	7.3	0.7 (7.0)	SB04B1	110	10	0.40
AS06	5.2	21.0 (2140)	16.0	0.7 (7.0)	SB06B1	165	23	1.04
AS08	6.3	33.0 (3365)	27.7	0.7 (7.0)	SB08B1	210	30	1.81
AS10	6.3	48.0 (4895)	42.5	0.7 (7.0)	SB10A1	254	50	2.52

Work Gripper (Multi-Plate)
ASM-C series

Multi-plate allows simultaneous machining with up to six grippers on one plate

- ●Lock valve unit (option) can be mounted
- ●Three jaws (AS type) and two jaws (AT type) can be combined freely

■ MODEL NUMBER EXPLANATION

AS06M4C

- Cast iron
- Number of Work Gripper
- Multi Plate
- Chuck-size (04~10)
- Work Gripper type

■ Dimensional Drawings

▼2 chuck fixture

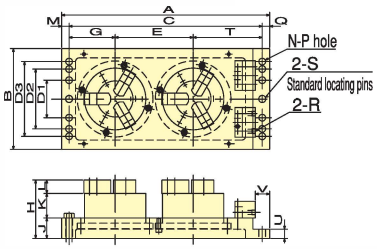

▼4 chuck fixture

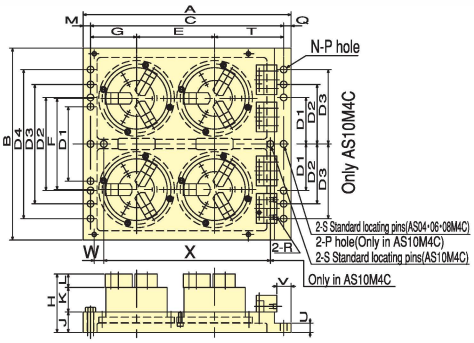

▼6 chuck fixture

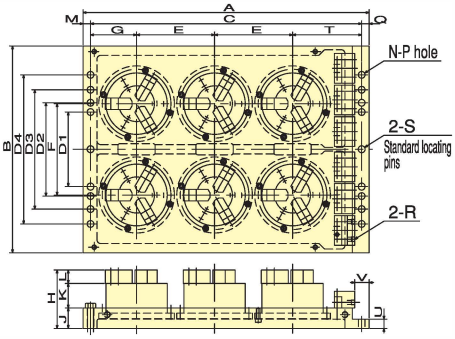

■ Dimensions

Model \ Dimensions	spec	Matching Work Gripper	A	B	C	D1	D2	D3	D4	E	F	G	H	J
AS04M2C	2 chuck fixture	AS04	450	205	410	100	160	–	–	155	–	100	143	55
AS06M2C	2 chuck fixture	AS06	560	270	520	100	160	200	–	210	–	124	157	55
AS08M2C	2 chuck fixture	AS08	655	315	615	160	200	250	–	255	–	150	174	55
AS10M2C	2 chuck fixture	AS10	765	375	725	160	200	250	–	310	–	175	182	60
AS04M4C	4 chuck fixture	AS04	450	380	410	160	200	250	320	155	180	100	143	55
AS06M4C	4 chuck fixture	AS06	560	515	520	200	250	320	400	210	245	124	157	55
AS08M4C	4 chuck fixture	AS08	655	600	615	200	250	400	500	255	285	150	174	55
AS10M4C	4 chuck fixture	AS10	765	705	725	160	200	250	–	310	335	175	182	60
AS04M6C	6 chuck fixture	AS04	660	380	620	160	200	250	320	155	180	155	143	55
AS06M6C	6 chuck fixture	AS06	770	555	730	200	250	320	400	210	245	124	157	55

Model \ Dimensions	K	L	M	N	φP	Q	R	φS	T	U	V	W	X	Net Weight (kg)
AS04M2C	61	27	20	8	18	20	Rc1/4	18	155	25	38.5	–	–	17.0
AS06M2C	66	36	20	12	18	20	Rc1/4	18	186	25	38.5	–	–	26.0
AS08M2C	77	42	20	12	18	20	Rc1/4	18	210	25	38.5	–	–	32.0
AS10M2C	76	46	20	12	18	20	Rc1/4	18	240	25	43.5	–	–	50.0
AS04M4C	61	27	20	16	18	20	Rc1/4	18	155	25	38.5	–	–	31.0
AS06M4C	66	36	20	16	18	20	Rc1/4	18	186	25	38.5	–	–	47.0
AS08M4C	77	42	20	16	18	20	Rc1/4	18	210	25	38.5	–	–	58.0
AS10M4C	76	46	20	14	18	20	Rc1/4	18	240	25	43.5	40	645	90.0
AS04M6C	61	27	20	16	18	20	Rc1/4	18	155	25	38.5	–	–	40.0
AS06M6C	66	36	20	16	18	20	Rc1/4	18	186	25	38.5	–	–	67.0

WORK GRIPPER

2-Jaw Work Gripper AT series

Secure gripping of all types of component
Can be used as an alternative to a fixture

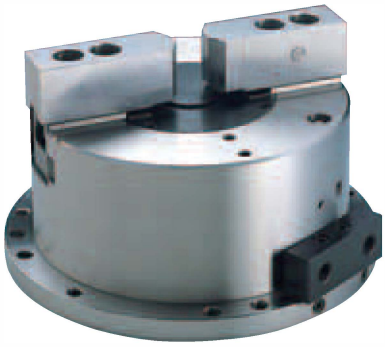

- ●Small and lightweight design, with inbuilt air cylinder
- ●Easy mounting by air piping
- ●Hollow structure optimal for bar workiece and air blow
- ●Standard Soft Jaw for Power Chuck is used
- ●Lock valve unit ensures constant and regular gripping force in all machining conditions

＊CE correspondence

■ Dimensional Drawings

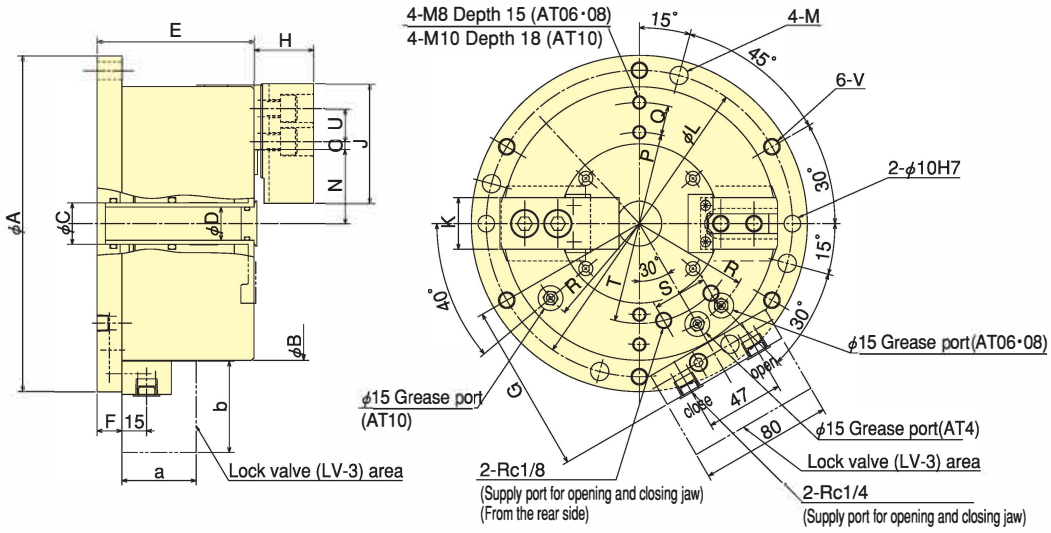

■ Dimensions ※The dimensions of W/X marked are the size of LV-3(Lock-valve).

Model \ Dimensions	φA (h7)	φB	φC	φD	E	F	G	G	H	J	K	φL (±0.2)	φM	N max.	N min.	O max.	O min.	P	Q
AT04	148	110	20H7	–	90	15	75.5	(110.5)	27	55	23	130	9	25.5	22.9	9.75	6.75	–	–
AT06	203	165	25H7	20	95	15	103	(138)	36	72	31	185	11	44.5	41.9	9.25	4.75	55	18
AT08	248	210	36H7	30	106	15	125.5	(160.5)	42	95	35	230	11	53	49.85	14.75	8.75	68	25
AT10	300	254	50H7	43	110	16	147.5	(182.5)	46	110	40	280	13	66	62.85	16	8.5	85	30

Model \ Dimensions	R	S	T	U	V	a	b
AT04	43	33	34	14	M8	45	55
AT06	70	33	60.3	20	M10	45	55
AT08	90	33	80	25	M10	45	55
AT10	110	33	95	30	M12	45	55

■ Specifications ※Air Consumption = Under Pressure 0.6MPa Plunger Stroke per 10mm

Model \ Specifications	Jaw Stroke (diameter) mm	Gripping Force [Pneumatic at 0.6MPa (0.6kgf/cm²)] kN (kgf)	Net Weight (kg)	Max. air pressure MPa(kgf/cm²)	Matching Soft top jaw	Gripping range(mm) Max.	Gripping range(mm) Min.	Air Consumption (Nℓ)
AT04	5.2	7.5 (765)	6.9	0.6 (6.0)	SB04A1T	110	10	0.40
AT06	5.2	21.0 (2140)	15.0	0.6 (6.0)	SB06A1T	165	23	1.04
AT08	6.3	33.0 (3365)	26.7	0.6 (6.0)	SB08A1T	210	30	1.81
AT10	6.3	48.0 (4895)	40.8	0.6 (6.0)	SB10A1T	254	50	2.52

WORK GRIPPER

2-Jaw Work Gripper (Multi-Plate)

ATM-C series

Multi-plate allows simultaneous machining with up to six grippers on one plate

- Lock valve unit (option) can be mounted
- Three jaws (AS type) and two jaws (AT type) can be combined freely

■ MODEL NUMBER EXPLANATION

AT06M4C

- Cast iron
- Number of Work Gripper
- Multi Plate
- Chuck-size (04~10)
- Work Gripper type

■ Dimensional Drawings

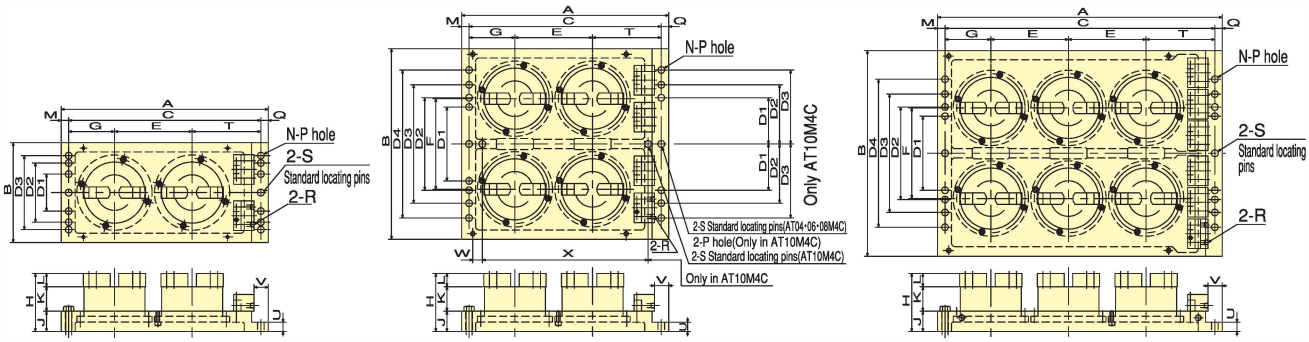

▲2 chuck fixture ▲4 chuck fixture ▲6 chuck fixture

■ Dimensions

Model \ Dimensions	spec	Matching Work Gripper	A	B	C	D1	D2	D3	D4	E	F	G	H	J
AT04M2C	2 chuck fixture	AT04	450	205	410	100	160	–	–	155	–	100	143	55
AT06M2C	2 chuck fixture	AT06	560	270	520	100	160	200	–	210	–	124	157	55
AT08M2C	2 chuck fixture	AT08	655	315	615	160	200	250	–	255	–	150	174	55
AT10M2C	2 chuck fixture	AT10	765	375	725	160	200	250	–	310	–	175	182	60
AT04M4C	4 chuck fixture	AT04	450	380	410	160	200	250	320	155	180	100	143	55
AT06M4C	4 chuck fixture	AT06	560	515	520	200	250	320	400	210	245	124	157	55
AT08M4C	4 chuck fixture	AT08	655	600	615	200	250	400	500	255	285	150	174	55
AT10M4C	4 chuck fixture	AT10	765	705	725	160	200	250	–	310	335	175	182	60
AT04M6C	6 chuck fixture	AT04	660	380	620	160	200	250	320	155	180	155	143	55
AT06M6C	6 chuck fixture	AT06	770	555	730	200	250	320	400	210	245	124	157	55

Model \ Dimensions	K	L	M	N	φP	Q	R	φS	T	U	V	W	X	Net Weight (kg)
AT04M2C	61	27	20	8	18	20	Rc1/4	18	155	25	38.5	–	–	17.0
AT06M2C	66	36	20	12	18	20	Rc1/4	18	186	25	38.5	–	–	26.0
AT08M2C	77	42	20	12	18	20	Rc1/4	18	210	25	38.5	–	–	32.0
AT10M2C	76	46	20	12	18	20	Rc1/4	18	240	25	43.5	–	–	50.0
AT04M4C	61	27	20	16	18	20	Rc1/4	18	155	25	38.5	–	–	31.0
AT06M4C	66	36	20	16	18	20	Rc1/4	18	186	25	38.5	–	–	47.0
AT08M4C	77	42	20	16	18	20	Rc1/4	18	210	25	38.5	–	–	58.0
AT10M4C	76	46	20	14	18	20	Rc1/4	18	240	25	43.5	40	645	90.0
AT04M6C	61	27	20	16	18	20	Rc1/4	18	155	25	38.5	–	–	40.0
AT06M6C	66	36	20	16	18	20	Rc1/4	18	186	25	38.5	–	–	67.0

WORK GRIPPER

Power Wing Work Gripper PWS06

Suitable for 3 to 5-Axis machines
Cost reduction achieved by built-in Cylinder

- ●Stationary clamping by pull back the workpiece
  Suitable for rough machining, OP-10 or OP-20 with reduced setup time.
- ●Cost reduction achieved by built-in Cylinder
- ●Available on the standard column of machine
- ●Available to be mounted on NC Rotary Table

＊No need to introduce separated Cylinder for Chuck.
＊Total height is reduced by built-in Cylinder.

■ Dimensional Drawings

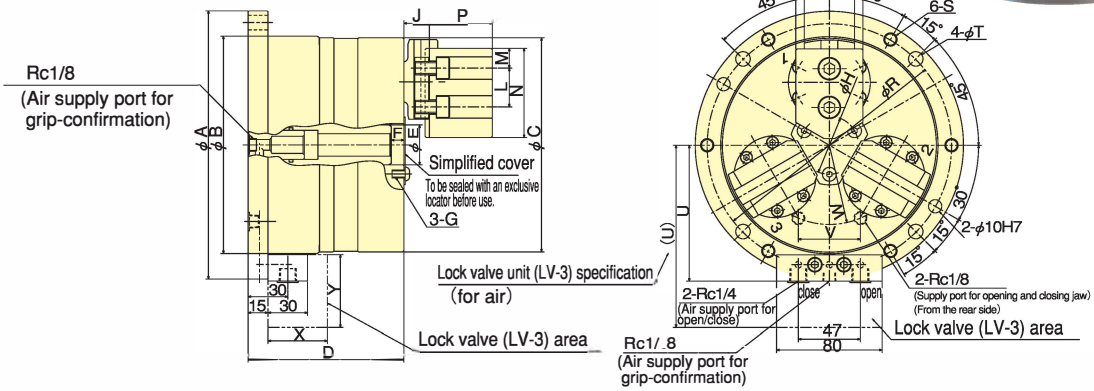

■ Dimensions ※The dimensions of (U)/X/Y marked are the size of LV-3(Lock-valve).

Model \ Dimensions	A h7	B	C	D	E +0.02 0	F min	G	H	J	K	L	M	N	P	Q	R (±0.2)	S	T	U	(U)	V	W	X	Y
PWS06	203	164.5	162	118	30.17	3.5	M6 Depth 12	44	19.3	38.07	29.36	15	67.5	47.7	50.8	185	M10	11	103	138	47	60	45	55

■ Specifications ※Clamping force varies in clamping state for jaws and workpiece. ※Air Consumption = Under Pressure 0.6MPa Plunger Stroke per 10mm

Model \ Dimensions	Plunger Stroke mm	Jaw Stroke (diameter) mm	Gripping Force kN (kgf)		Max. allowable pressure MPa (kgf/cm²)		Min. allowable pressure MPa (kgf/cm²)	Gripping range mm				Net Weight with Soft top jaws kg	Air Consumption (Nℓ)
			Pneumatic at 0.6MPa (6kgf/cm²)	Hydraulic at 1.3MPa (13kgf/cm²)	Pneumatic	Hydraulic		external φ		Internal φ			
								Max.	Min.	Max.	Min.		
PWS06	11.1	7.7	19 (1937)	53 (5404)	0.7 (7)	1.3 (13)	0.2 (2)	120	12.7	152	70	24	0.54

■Dimensional Drawing for actuated position (External Gripping)

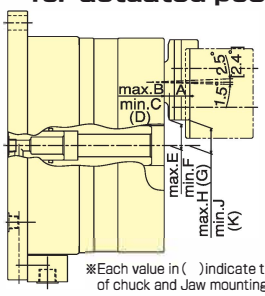

※Each value in ( ) indicate that surface of chuck and Jaw mounting side is parallel.

■Dimensions for actuated position (External Gripping)

Model \ Dimensions	A	B	C	D	E	F	G	H	J	K
PWS06	15.50	4.96	3.05	3.80	20.06	18.89	19.33	20.70	18.48	19.33

■Dimensional Drawing for actuated position (Internal Gripping)

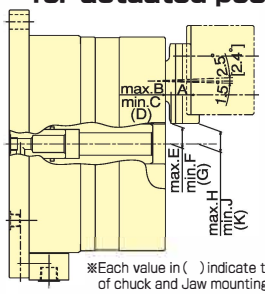

※Each value in ( ) indicate that surface of chuck and Jaw mounting side is parallel.

■Dimensions for actuated position (Internal Gripping)

Model \ Dimensions	A	B	C	D	E	F	G	H	J	K
PWS06	15.03	5.59	3.43	4.27	16.28	15.08	15.53	17.17	14.52	15.53

WORK GRIPPER

Internal Pull Lock Work Gripper
PUES06

Suitable for 3 to 5-Axis machines
Cost reduction achieved by built-in Cylinder

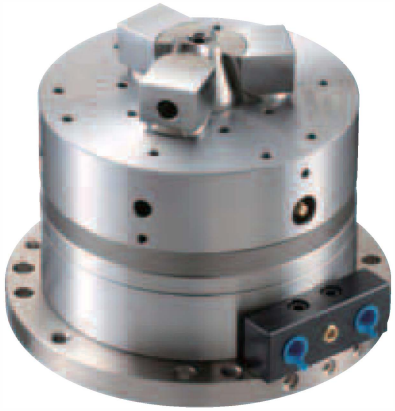

- ●Pull back and clamping the inner diameter of workpiece
  Suitable for finish machining with stationary machining accuracy.
- ●Cost reduction achieved by built-in Cylinder
  No need to introduce separated Cylinder for Chuck.
- ●Available on the standard column of machine
  Total height is reduced by built-in Cylinder.
- ●Available to be mounted on NC Rotary Table

■ Dimensional Drawings

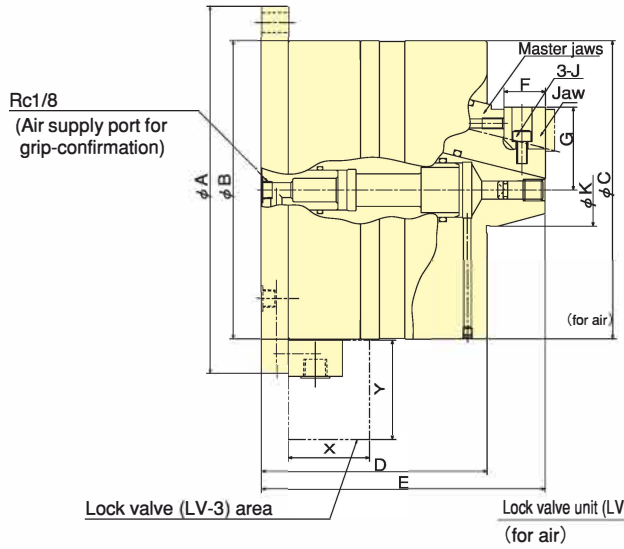

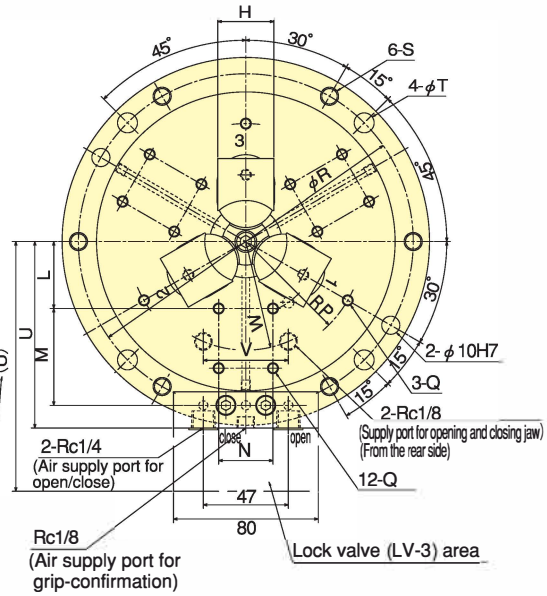

■ Dimensions ※The dimensions of (U)/X/Y marked are the size of LV-3(Lock-valve).

Model \ Dimensions	A h7	B	C	D	E	F	G max.	G min.	H	J	K	L	M	N	P	Q	R (±0.2)	S	T	U	(U)	V	W	X	Y
PUES06	203	165	165	125	157	23	45.7	44.5	31	M6	40	37	33	30	65	M6 Depth12	185	M10	11	103	138	47	60	45	55

■ Specifications ※Clamping force varies in clamping state for jaws and workpiece. ※Air Consumption = Under Pressure 0.6MPa Plunger Stroke per 10mm

Model \ Dimensions	Plunger Stroke mm	Jaw Stroke (diameter) mm	Gripping Force kN (kgf)		Max. allowable pressure MPa (kgf/cm²)		Min. allowable pressure MPa (kgf/cm²)	Gripping range mm			Net Weight with Soft top jaws kg	Air Consumption (Nℓ)
			Pneumatic at 0.6MPa (6kgf/cm²)	Hydraulic at 1.3MPa (13kgf/cm²)	Pneumatic	Hydraulic		Standard jaws	Option jaws	Master jaws		
PUES06	10	4.8	20 (2039)	57 (5812)	0.7(7)	1.3(13)	0.2(2)	φ70~φ89	φ89~φ105	φ44~φ70	21	0.54

WORK GRIPPER

Pull Lock Work Gripper PLS series

Pull Lock for steady gripping
Stable cutting is guaranteed through the high precision and exceptional gripping performance. Can be used as alternative to a fixture

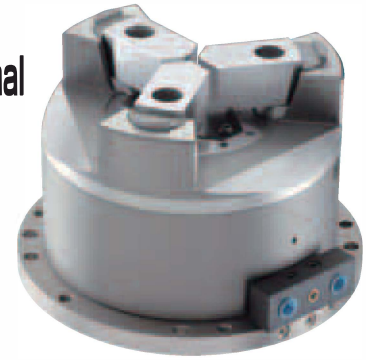

- Stable cutting is performed by high precision and high gripping force
- Perfect for CNC machining applications, thanks to component detection feature
- Multiplate system also accommodates PLS Series gripper, allowing up to six grippers per station
- It's compact design, featuring an inbuilt cylinder allows for more space in the machining envelope

＊CE correspondence

■ Dimensional Drawings

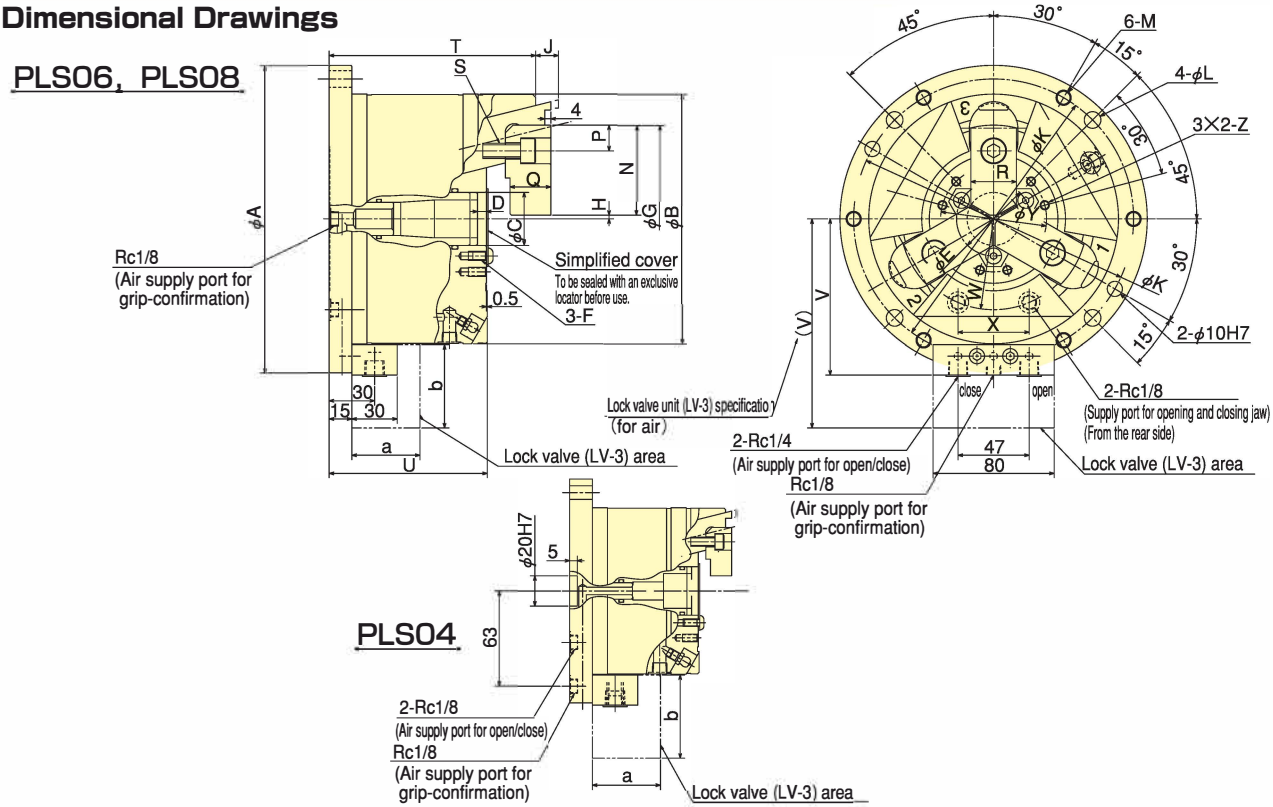

■ Dimensions ※The dimensions of a/b marked are the size of LV-3(Lock-valve).

Model \ Dimensions	A (h7)	B ($^{0.0}_{-0.1}$)	C ($^{+0.01}_{0}$)	D min.	E	F	G (H6)	H max.	H min.	J max.	J min.	K (±0.2)	L	M	N
PLS04	148	110.1	32	4.5	42	M5 Depth 10	84	2.25	0.75	7	1	130	9	M 8	40.5
PLS06	203	165.1	35	6.0	49	M6 Depth 12	124	3.75	1.25	15	5	185	11	M10	59.5
PLS08	248	210.1	55	6.0	71	M6 Depth 12	154	3.75	1.25	17	7	230	11	M10	74.5

Model \ Dimensions	P	Q	R	S	T	U	V	(V)	W	X	Y	Z	a	b
PLS04	9.5	14	20	M 6	103	85.5	75.5	110.5	34	33	62	M5 Depth 10	45	55
PLS06	17	27	30	M10	136.5	104.5	103	138	60	47	70	M6 Depth 12	45	55
PLS08	20.5	31	35	M12	155.5	118.5	125.5	160.5	80	47	95	M6 Depth 12	45	55

■ Specifications ※Clamping force varies in clamping state for jaws and workpiece. ※Air Consumption = Under Pressure 0.6MPa Plunger Stroke per 10mm

Model \ Specifications	Plunger Stroke mm	Jaw Stroke (diameter) mm	Gripping Force kN (kgf) Pneumatic at 0.6MPa (6kgf/cm²) Use of soft jaw	Pneumatic at 0.6MPa (6kgf/cm²) Use of hardened jaw	Hydraulic at 1.3MPa (13kgf/cm²) Use of soft jaw	Hydraulic at 1.3MPa (13kgf/cm²) Use of hardened jaw	Max. allowable pressure MPa (kgf/cm²) Pneumatic	Max. allowable pressure MPa (kgf/cm²) Hydraulic	Min. allowable pressure MPa (kgf/cm²)	Gripping range mm Max.	Gripping range mm Min.	Net Weight with Soft top jaws kg	Air Consumption (N ℓ)
PLS04	6	3	6.7 (683)	7.4 (754)	16.0 (1631)	17.4 (1774)	0.7 (7.0)	1.3 (13.0)	0.2 (2.0)	φ60	φ4	7.4	0.22
PLS06	10	5	18.5 (1886)	22.0 (2243)	40.0 (4078)	45.0 (4588)				φ100	φ7	18.0	0.54
PLS08	10	5	37.0 (3772)	40.0 (4078)	80.0 (8157)	84.0 (8565)				φ130	φ7	33.0	0.93

WORK GRIPPER

Jig Module JM200

Securely grips a wide range of irregularly shaped components
New clamping system accommodates a variety of workpieces

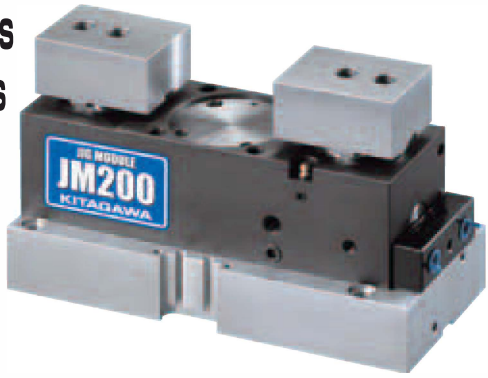

- Option of lock valve mechanism meaning that during machining work can be held without air line
- Centralizing or compensating is switchable
- Face grip (end grip) is possible
- Seating confirmation can be checked automatically

One unit is equipped with three gripping functions.

Centralizing Grip **Centralizing**

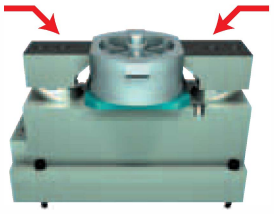

External gripping by pull down

Center compensation grip **Compensating**

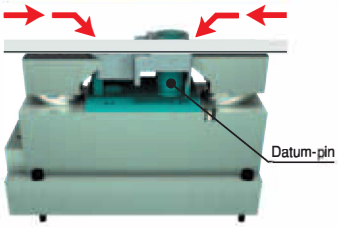

Compensating gripping using pin locators and pull down

End face grip **Face Grip**

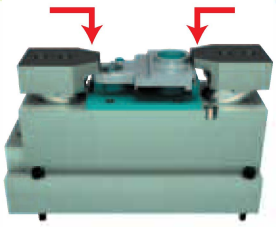

Face gripping by pull down

Seating confirmation can be checked

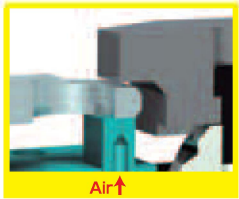

■ Dimensional Drawings

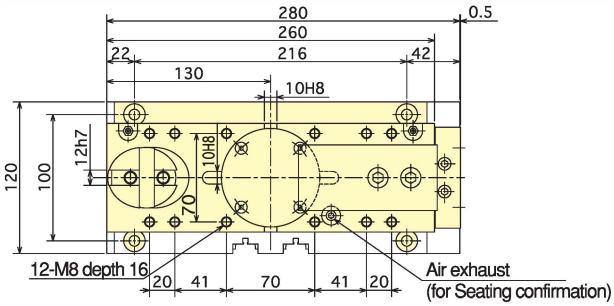

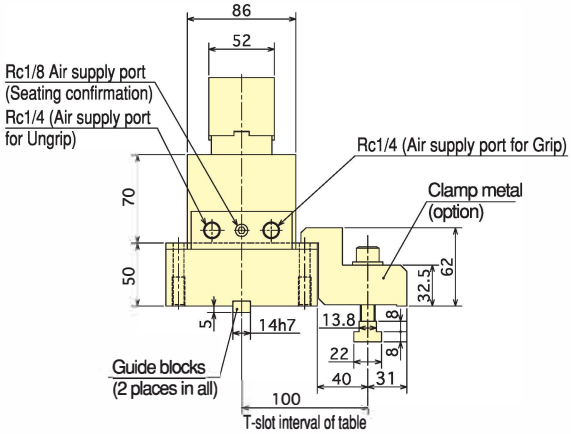

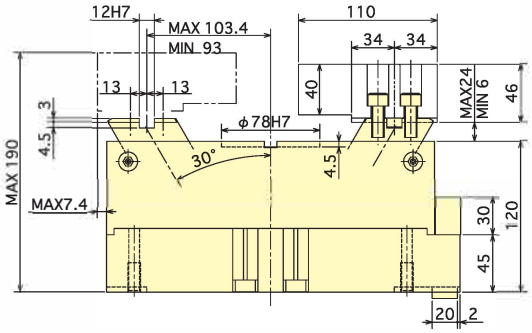

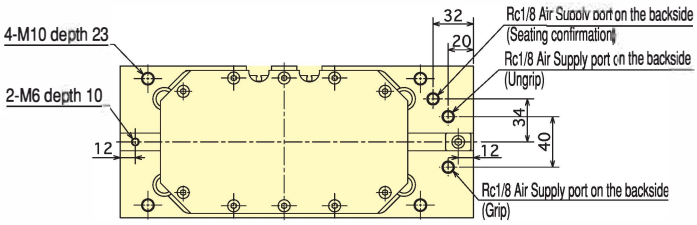

Note : Grip metals for mounting main part can be optionally offered.

■ Specifications

Cylinder Stroke (mm)	Jaw Stroke (mm)		Max. Gripping Force kN (kgf)		Min. Gripping Force kN (kgf)		Max. Oscillating amount (mm)		Work size (mm)		Net Weight (kg)	Max. air pressure MPa (kgf/cm²)	Min. air pressure MPa (kgf/cm²)
	Centring/Compensation	Face grip	Centring/Compensation	Face grip	Centering / Compensation	Face grip	Centering / Compensation	Face grip	Centering / Compensation	Face grip			
18	20.8	18	9.0 (918)	5.5 (561)	3.0 (306)	1.8 (184)	1.5	2.5	40~200	40~150	19.0	0.6 (6.0)	0.2 (2.0)

Work Gripper

WORK GRIPPER

Stationary Scroll Chuck SC-S series

Durable, reliable and versatile Stationary scroll chuck

- Available on multiplate for easy fixture mounting
- Compact designed
- Soft jaw can be machined to adapt to a wide range of machine workpieces
- Uses exclusive handle for clamping

2 chuck fixture sample

4 chuck fixture sample

Dimensional Drawings

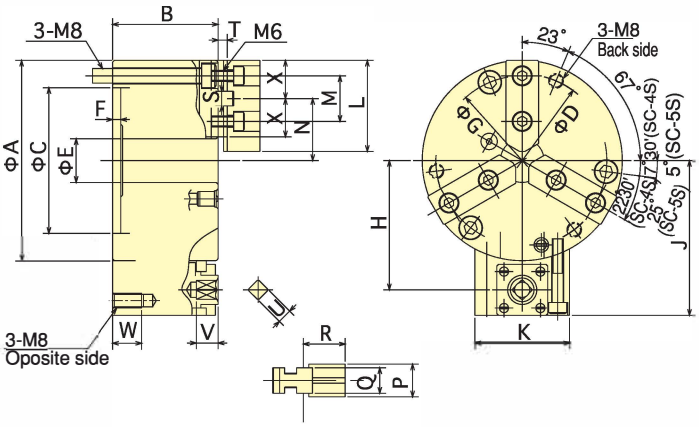

Specifications

Specifications / Model	Max. Gripping Force kN (kgf)	Allowable handle torque N・m (kgf・m)	Net Weight (kg)	Gripping range External mm	Gripping range Internal mm
SC-4S	9.6 (979)	27.5 (2.8)	4.0	3~95	29~84
SC-5S	12.0 (1224)	39.2 (4.0)	5.3	3~110	33~100

Dimensions

Dimensions / Model	A	B	C (H6)	D	E	F	G	H	J	K	L	M	Nmin	Nmax	P	Q	R	S	T	U	V	W	X
SC-4S	110	58	80	95	24	4.5	93	71	85	52	50	25	26	37	18	14	23	8	5	8	12	16	21
SC-5S	130	60	100	115	32	4.5	113	81	95	56	60	30	30	45	20	16	26	8	6	8	12	16	25

Dimensional Drawings for Soft Jaw

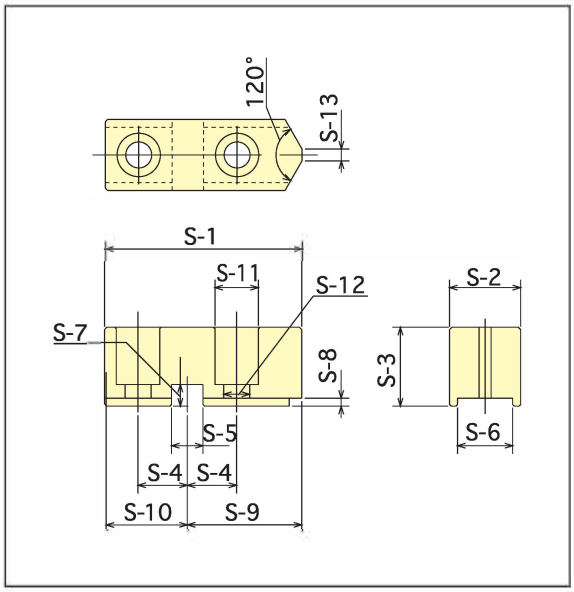

Dimensions for Soft Jaws

Dimensions / Model	chuck size	S-1	S-2	S-3	S-4 ±0.1	S-5 +0.01 0	S-6 +0.05 +0.02
SBS04S	4	50	18	20	12.5	8	14
SBS05S	5	60	20	22	15	8	16

Dimensions / Model	S-7	S-8	S-9	S-10	S-11	S-12	S-13
SBS04S	5.5	2	29	21	11	6.6	3
SBS05S	5.5	2	35	25	11	6.6	3

Dimensional Drawings for Handle

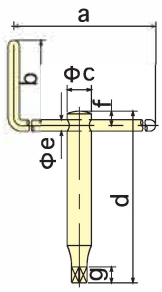

Dimensions for Handles

Dimensions / Model	a	b	c	d	e	f	g
SC-4S	130	60	17	120	8	10	11
SC-5S	150	60	20	130	10	12	11

Option

LV-3

■ Air Lock Valve Unit

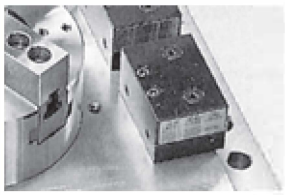

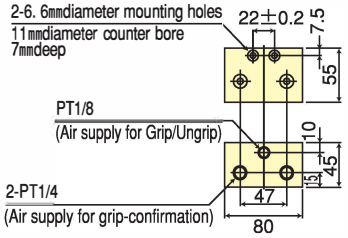

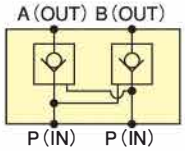

AIR DIAGRAM

AV-02F

■ Original manual air valve by **KITAGAWA**

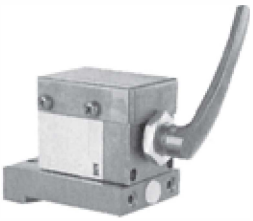

AV-02F allows air system to be simplified

※Valves can be easily mounted onto work gripper and multiplate.

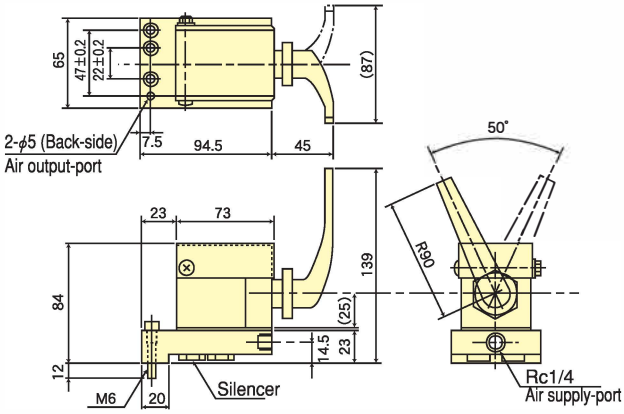

Max. pressure	1MPa (10kgf/cm²)
Lever movement	50°
Connection port	Rc¼

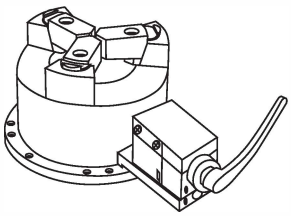

■ Mounting Drawing (by AV-02F)

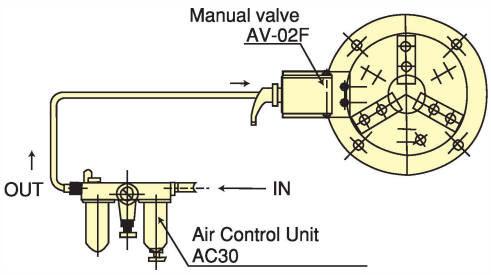

VH-201

■ Manual Air Valve

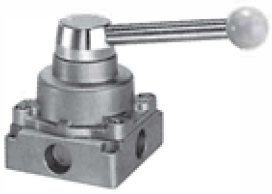

Max. pressure	1MPa (10kgf/cm²)
Lever movement	90°
Connection port	Rc¼

■ Mounting Drawing (by VH-201)

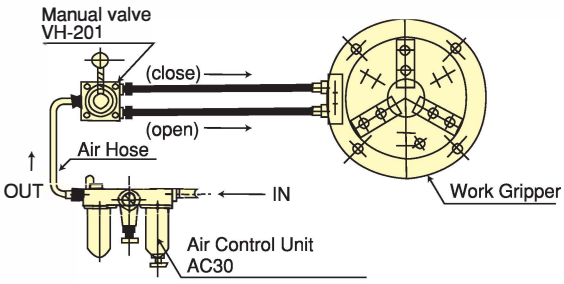

AC30

■ Air Control Unit (With Lubrication)

Max. pressure	1MPa (10kgf/cm²)
Pressure setting range	0.05~0.85MPa (0.5~8.6kgf/cm²)
Filter mesh	5μm
Max. temperature	60℃
Connection port	Rc¼